	Date:
	Client:
	Project:

RB1

Pillar tap with ¼ turn ceramic disc technology, fixed spout with water saving aerator.
Height 120 mm. Hole cut out size: 32 mm.

Flow

	Bar:	**1.0**	**2.0**	**3.0**	**4.0**	**5.0**
RB1	(l/min)	2.9	4.1	5.0	5.0	5.0
RB1 [1)]	(l/min)	2.6	3.7	4.5	4.5	4.5

[1)] USA Standard

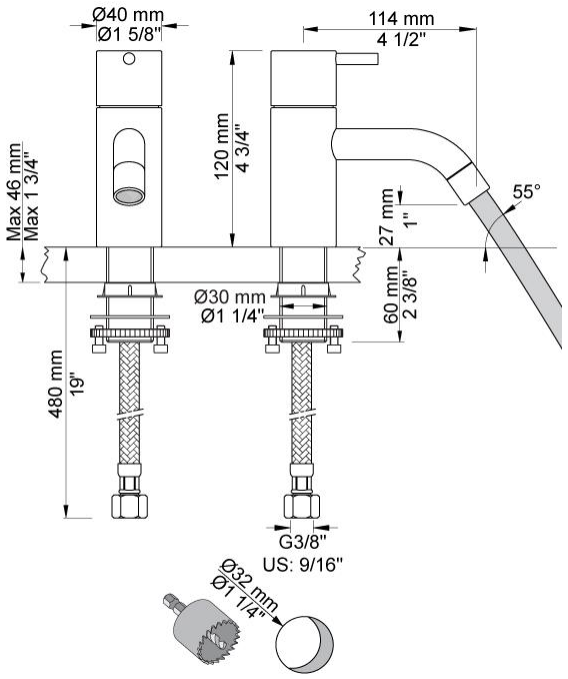

Available in colors

Color 02, Grey	Color 21, Carmine red
Color 04, Light blue	Color 25, Pink
Color 05, Orange	Color 27, Matt black
Color 06, Light green	Color 28, Matt white
Color 08, Yellow	Color 40, Brushed stainless steel
Color 09, Dark grey	Color 60, Black
Color 12, Mocca	Color 61, Brushed black
Color 14, Bright red	Color 62, Deep black
Color 15, Dark blue	Color 63, Copper
Color 16, Polished chrome	Color 64, Brushed Copper
Color 17, Gloss black	Color 65, Gold
Color 18, White	Color 68, Silver
Color 19, Natural brass	Color 70, Brushed Gold
Color 20, Brushed chrome	